**Eliwell France**
1 avenue de l'ormeteau, 92230 Gennevilliers, France
tel: +33 (0)1 41 47 71 61 fax: +33 (0)1 47 99 95 95
www.eliwell.eu



## DR 984

## Single stage controller for temperature

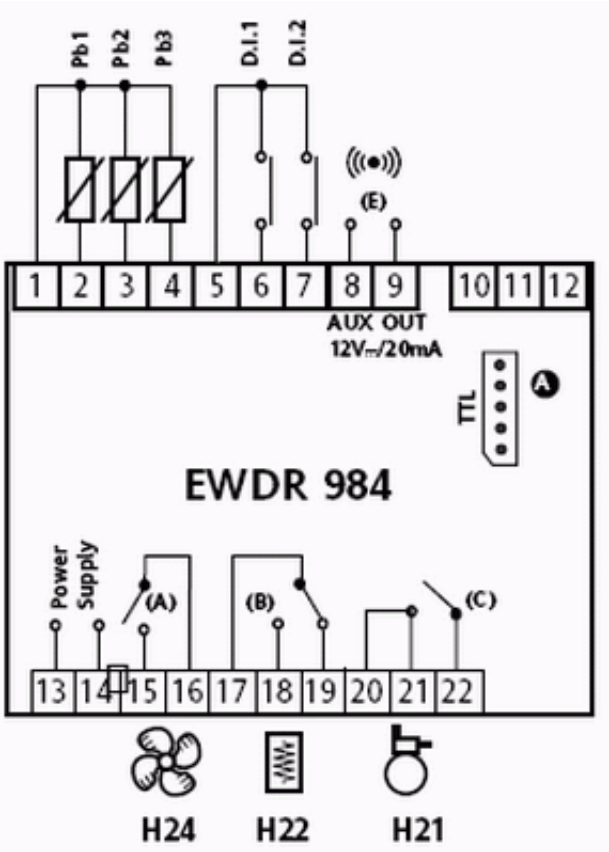


The continuous improvement of our products can cause some variations in this document even without notice.

© Eliwell France